[Total No. of Printed Pages:2] **CODE NO:- U-503**

FACULTY OF ENGINEERING

SE(EEP/EE/EEP) Examination - DEC – 2014

Electrical Measuring Techniques (Revised)

[Time: THREE *Hours*] **[Max. Marks: 80]**

"Please check whether you have got the right question paper."

i) Answer to the two sections must be written in same answer book

ii) Question no. 1 & question no. 6 are compulsory.

iii) Attempt any two questions from the remaining questions of each section.

iv) Assume the suitable data wherever necessary.

SECTION- A

Q1 Solve any five questions. (10)

i) Define the terms. Linearity and dead zone.

ii) What is difference between absolute error and relative error?

iii) The measured value of resistance is 10.35 Ω where as its value is 10.20 Ω determine the absolute error.

iv) What is difference between primary and secondary standards.

v) What are main advantages of PMMC

vi) Why eddy current damping not possible in moving iron instruments.

vii) Name the commonly used detectors for AC bridges.

viii) What is meant by Q-factor of coil?

Q2 a) Derive the equation of balance Maxwell's inductance bridge. Draw the phasor diagram for balance condition. (08)

b) An Anderson bridge forms the measuring inductance L and resistance R. of the coil find R & L. If balance is obtained when Q = S = 1000Ω , P = 500Ω, E = 100Ω & C = 0.5 uF. As show in fig 1. (07)

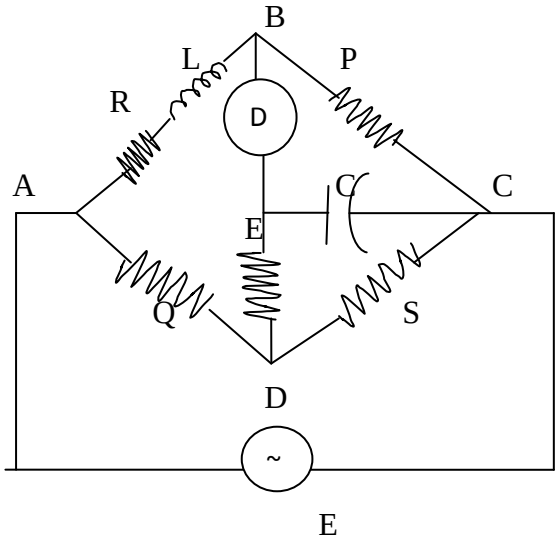

Figure.1

Q3 a) Derive the torque equation fear PMMC instrument. (08)

b) The coil of a moving coil voltmeter is 40 mm long and 30 mm wide. And has 100 turns on it the control spring exerts a torque of 240×10^{-6} NM when the defection is 100 divisions on full scale. If the flux density of the magnetic field in the air gap is $1wb/m^2$, calculate the resistance that must be put in series with coil to give 1V per div. the resistance of the voltmeter coil may be neglected (07)

Q4 a) Derive the power measurement equation in three phase system for unbalanced load using three wattmeter method. (08)

b) In a 3Ø circuit, two wattmeter used to measure power indicate 1200W and 600W respectively. Find the power factor of the circuit: (07)

a) When both wattmeter reading are positive. b) When the latter is obtain by reversing the current coil connections.

Q5 a) What are error in dyno meter type watt meters? (06)

b) What are function of indicating and recording instrument? (04)

c) Explain voltmeter ammeter method for measurement of resistance (05)

SECTION-B

Q6 Solve any five questions. (10)

i) For what horizontal & vertical plates are provided is a CRO?

ii) What is lissajous pattern?

iii) What is dual beam CRO?

iv) What is meant by transducer?

v) What is difference between the in energy meter and a watt meter?

vi) The power input to a 3Ø I.M. is read by two wattmeter. The readings are 920W and 300W. Calculate the power factor of motor?

vii) How is compensation provided from vibration in voltage is energy meter?

Viii) The name plate of a meter reads 1kwh = 15000 revolution in a checkup; the meter completed 150 revolution during 45 seconds. Calculate power in circuit.

Q7 a) What are different errors occurs in 1Ø conventional energy meters? (08)

b) A correctly adjusted single phase 240v watt-hour meter has a meter constant of 600 revolution/kwh. Determine. The speed of the disc for a current of 8A at a lagging p.f 0.6 (07)

Q8 a) Explain the basic principle of inductive and capacitive transducer. (08)

b) Draw the block diagram of basic CRO and explain each block. (07)

Q9 a) What are advantages of CT and PT? (07)

b) Explain the use of instrument transformer what are advantage over the shunt and multipliers. (08)

Q10 a) Write short note on active & passive transducers. (04)

b) Write short note on universal shunt (05)

c) Write short note on phase angle measurement by CRO. (06)