[Total No. of Printed Pages:2] **CODE NO:- U-8216**

FACULTY OF ENGINEERING & TECHNOLOGY

M.E.(Electrical power Systems) Examination - DEC – 2014

Computer Aided Power System Analysis(Revised)

[Time: THREE *Hours*] **[Max. Marks: 80]**

"Please check whether you have got the right question paper."

i) Answer any two question from section A & any two from section B

ii) Assume suitable data, if required

SECTION- A

Q1 a) Explain the principle of symmetrical components. What is the difference between positive and negative sequence components? Derive the relation between V_a, V_b, V_c and V_{a_0} V_{a_1} and Va_2. And also given V_{a_o}, V_{a_1} V_{a_2} derive the equation to obtain V_a, V_b, V_c (10)

b) Draw the positive negative and zero sequence networks of the power system as shown in fig 1 (10)

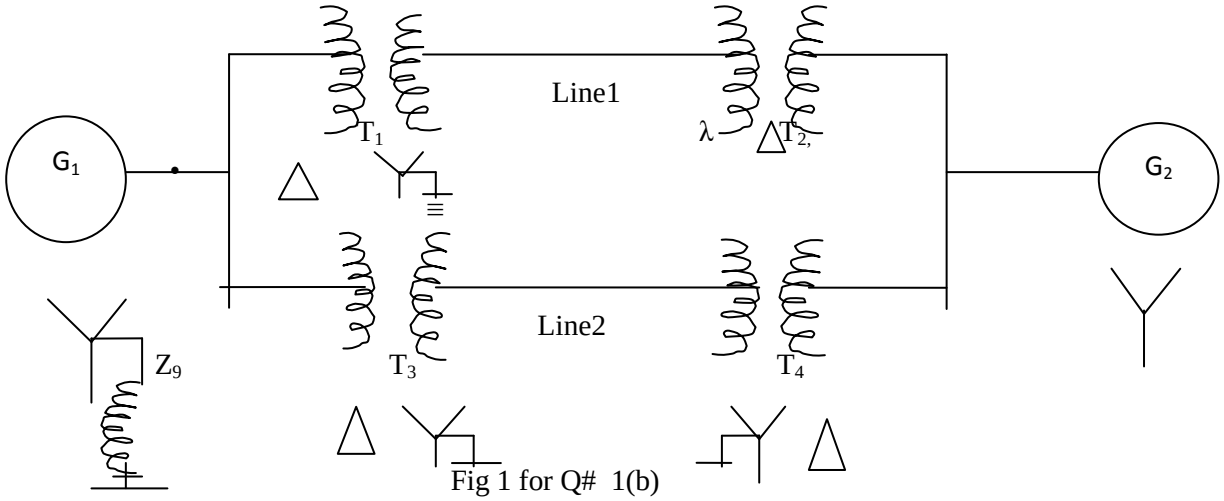

Fig 1 for Q# 1(b)

Q2 a) Explain the significance of per unit system in power system analysis & list the advantages of P.U. system. (08)

b) a 90 MVA, 11 KV, 3 phase generator has a reactance of 25%. The generator supplies two motor through transformers and transmission line as shown in fig. 2. The transformer T_1 is a 3-phase transformer, 100 MVA, 10,132 KV, 6% reactance. The transformer T_2 is composed of 3-single phase units each rated at 30 MVA, 66 KV/10 KV with 5% reactance. The connections of T_1 and T_2 are as shown. The motors are rated at 50 MVA and 40 MVA both 10 KV and 20% reactance. Taking the generator rating as base, draw reactance diagram and indicate the reactance's in per unit. The reactance of transmission line is 100 ohms. (12)

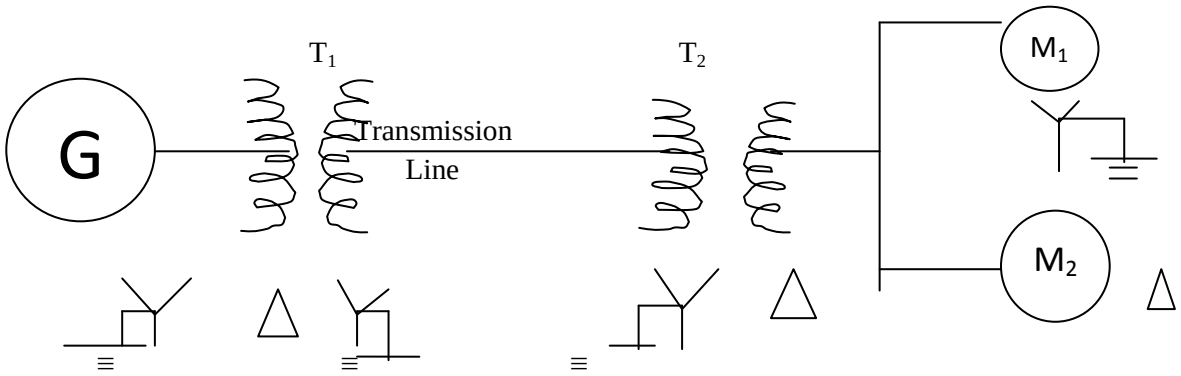

Fig .2 for Q #2(b)

Q3 a) Derive the expression for faultcurrent for double line to ground fault, also draw the interconnections ofsequence networks. (10)

b) Explain the sequence impedance of a three phase synchronous generator (10)

SECTION-B

Q4 a) Explain the features concerning the formation of constraint matrix K. (10)

b) Explain the transformation of shunt-faults with respect to the case of single line to ground fault (10)

Q5 A 50 MVA generator ,11 KV, 3-phases is feeding an 11/132KV, 50MVA transformer. The transformer feeds 132 KV line at the far end of which is a 132/33/3.3KV, 3 winding transformer, as shown in fig 3. (20)

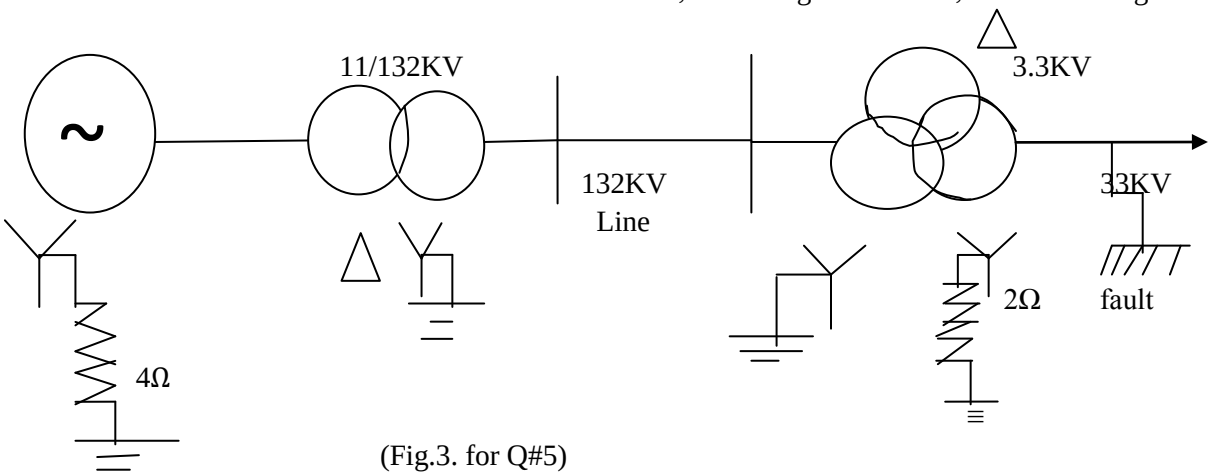

(Fig.3. for Q#5)

The data for power system in fig. 3 is as given below.

Generator: 50 MVA, 11 KV, x_1=0.4 pu. x_2=0.3 pu x_o=0.1 p.u. Y-connected, star-point earthed though 4Ω resistance.

two winding transformer: 50 MVA, 11KV/132 KV,

Δ/Y, star point solidly earthed, $x_1=x_2=x_0$=0.08 p. u.

Line: 132 KV, $x_1=x_2$=20 Ω and x_0=50Ω.

Three winding transformer: 50 MVA, 132/33/3.3KV ,132 KV winding solidly earthed, 33 KV winding earthed through 2 ohm resistance, 3.3 KV winding Δ-connected. 132KV winding,$x_1=x_2=x_0$=0.05 p.u., 33KV winding, $x_1=x_2=x_0$=0.04 p.u ,3.3 KV winding, $x_1=x_2=x_0$=0.06 p. u. A single line to ground fault occurs on one of the phases at 33 KV terminals. Find the fault-current and fault MVA.

Q6 a) State the advantages & disadvantages of Gauss-seidel method & Newton -Raphson method for power flow solution. (10)

b) With neat flow chart explain the power flow solution of Gauss. Seidel method. (10)