Total No. of Printed Pages:3

SUBJECT CODE 219
FACULTY OF ENGINEERING AND TECHNOLOGY
T.E.(EC/ETC/IE/E&C) Examination Nov/Dec 2015
Feedback Control System
(Revised)

[Time: Three Hours] **[Max. Marks: 80]**

"Please check whether you have got the right question paper."

N.B i) Q.No.1 from section A and Q.No.6 from section B are compulsory.
ii) Attempt any two questions from the remaining questions in each from section.
iii) Assume suitable data, if necessary.
iv) Numbers shown in right side indicates full marks.

Section-A

Q1. Answer the following in brief (Any five) 10

a. What is feed forward control system?
b. What is meant by disturbance in control system?
c. What is a block diagram reduction rule for shifting take-off point after a block?
d. What is Mason's gain formula?
e. How you define 'Type' of system?
f. What is a time constant if first order system has transfer function, G(s) $=\frac{5}{s+4}$?

Q.2 a) What are the elements of an open loop control system? Give a suitable example. What are the advantages and disadvantages of such open loop control system? 07

b) Derive the expression for under-damped response of the second order system subjected to unit step input,i.e. 08

$c(t) = 1 - \frac{e^{-\varsigma w_n t}}{\sqrt{1-\varsigma^2}} \sin(w_d t+\theta)$,Where $w_d=w_n\sqrt{1-\varsigma^2}$ and $\theta=\cos^{-1}\varsigma$

Q.3 a) Reduce the block diagram to its simple hence obtain C(s)/ R(s) 07

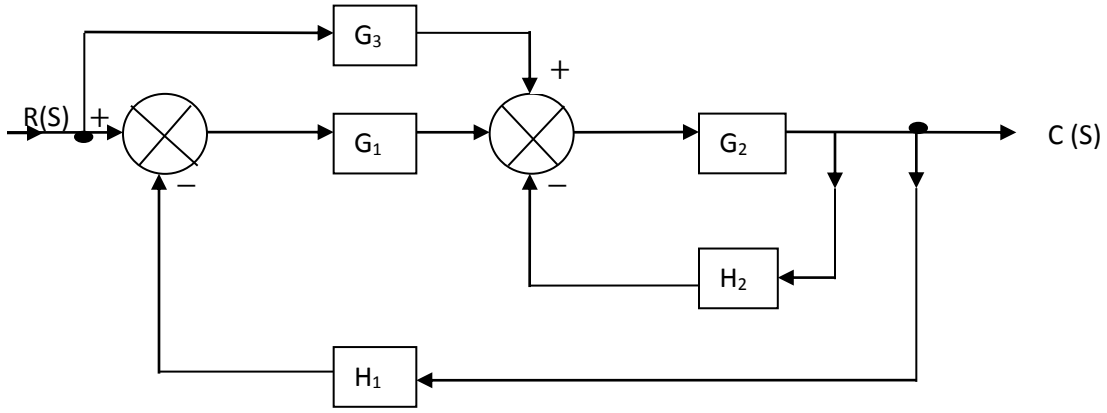

b) What is position, velocity and acceleration error constant? For a system 08

$G(s)H(s) = \frac{K}{s^2(s+2)(s+3)}$, find the value of k to limit steady state

K-2015

error to 10 when input to system is $1 + 10t + \frac{40}{2}t^2$

Q.4 a) Define- Transfer function .find out the transfer function of given network: 07

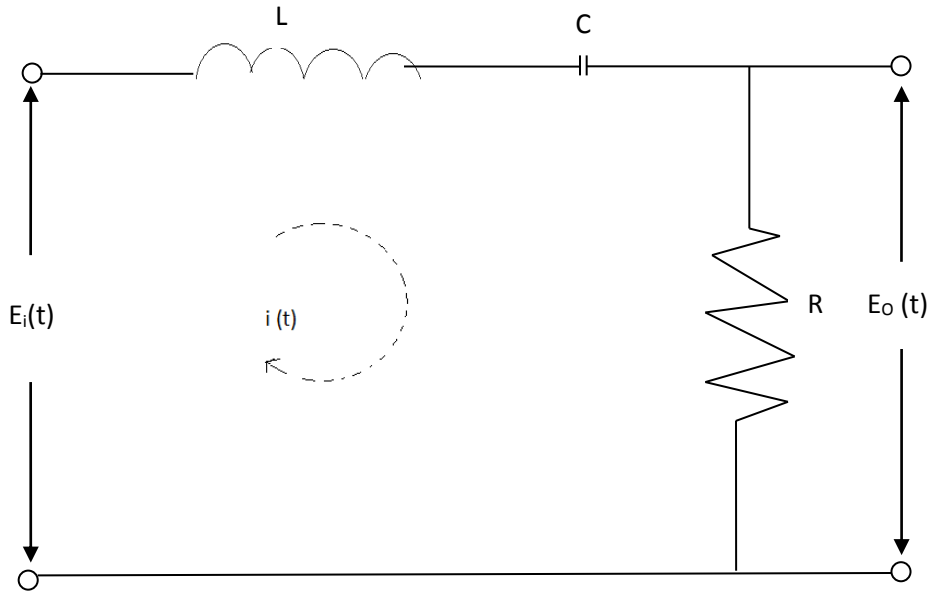

b) Derive the transfer function of armature controlled DC servomotor 08

Q.5 Write short notes on 15

a. Mathematical modeling of physical systems
b. Regenerative feedback
c. Derivative control action

Section-B

Q.6 Answer the following questions in brief (Any five) 10

a. What is the effect of adding zeros in root locus?
b. What is meant by relative stability?
c. What is a principle of argument in Nyquist stability?
d. How stability is defined based on information of gain and phase margin
e. What do you mean by 'Fuzzy' term?
f. What is meant by observability?

Q.7 a) An open loop transfer function of unity feedback system is, 07

$G(s) = \frac{K}{s(S^2+s+1)(s+2)}$.Find the range of K for stability. For what value of K system will oscillate and what is frequency of oscillations?

b) Consider, $G(s)H(s) = \frac{10}{s(S+1)(s+2)}$. Sketch the rough nature of polar plot of a given system. Calculate its gain margin in dB. Hence comment on its stability. 08

Q.8 a) Evaluate controllability and observability of the system represented in state space model with, 07

$$A = \begin{bmatrix} 0 & 1 & 0 \\ 0 & 0 & 1 \\ 0 & -2 & -3 \end{bmatrix} \; and \; B = \begin{bmatrix} 0 \\ 0 \\ 0 \end{bmatrix} \; and \; C = \begin{bmatrix} 3 & 4 & 1 \end{bmatrix}$$

b) Sketch the root locus diagram for a system having, $G\ (s)H(s) = \frac{K}{s(s^2+2_s+2)}$ 08

Q.9 A unity feedback control system has, $G(s) = \frac{80}{s(s+2)(s+20)}$ Draw a Bode plot. Determine wgc , wpc , G.M. and P.M. Comment on stability 15

Q.10 Write short notes on- 15

a. Programmable Logic Controller
b. Solution of state equation
c. Special cases in R-H Stability criteria